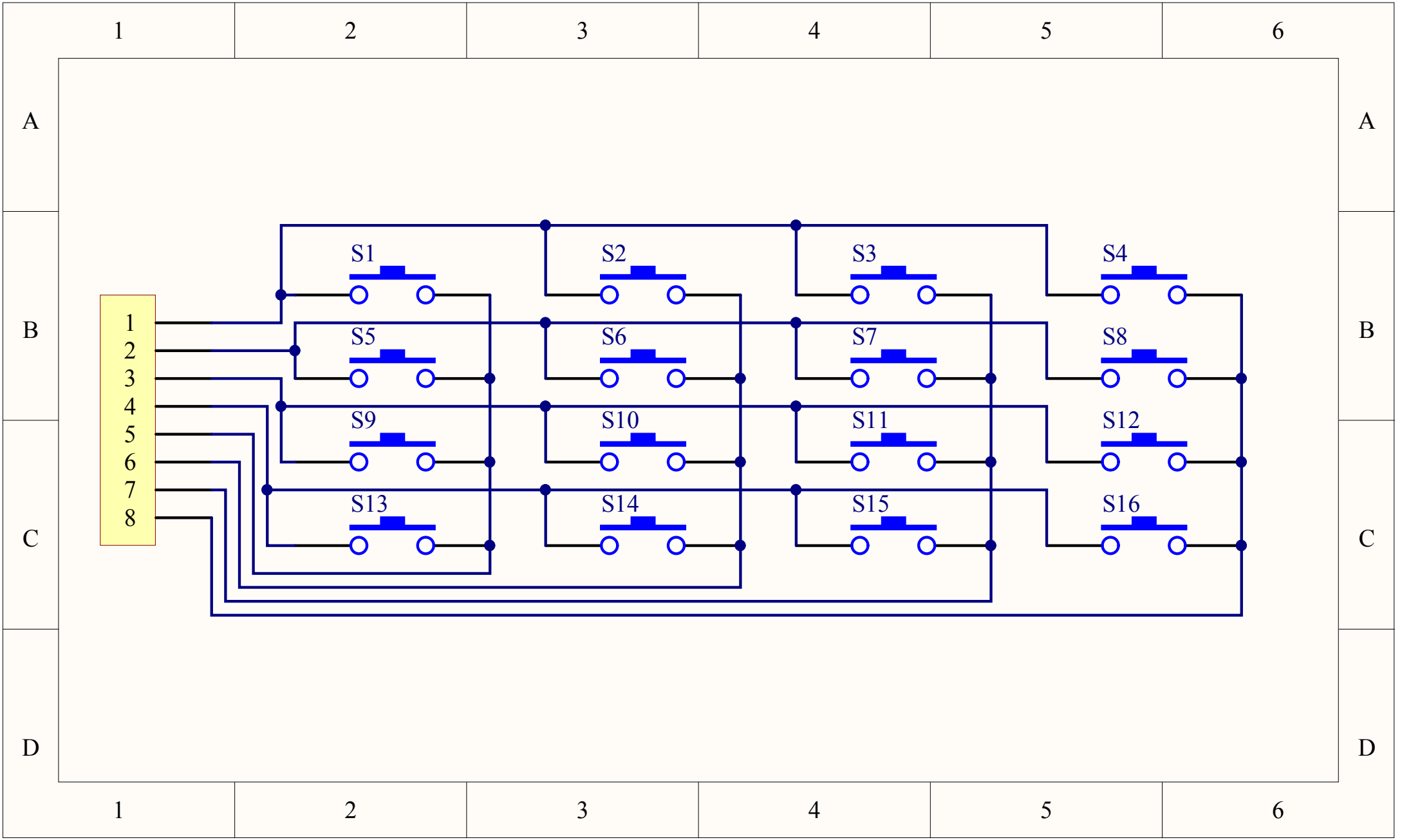
1
2
3
4
5
6
A
B
C
D
S1
S2
S3
S4
S5
S6
S7
S8
S9
S10
S11
S12
S13
S14
S15
S16
1
2
3
4
5
6
7
8