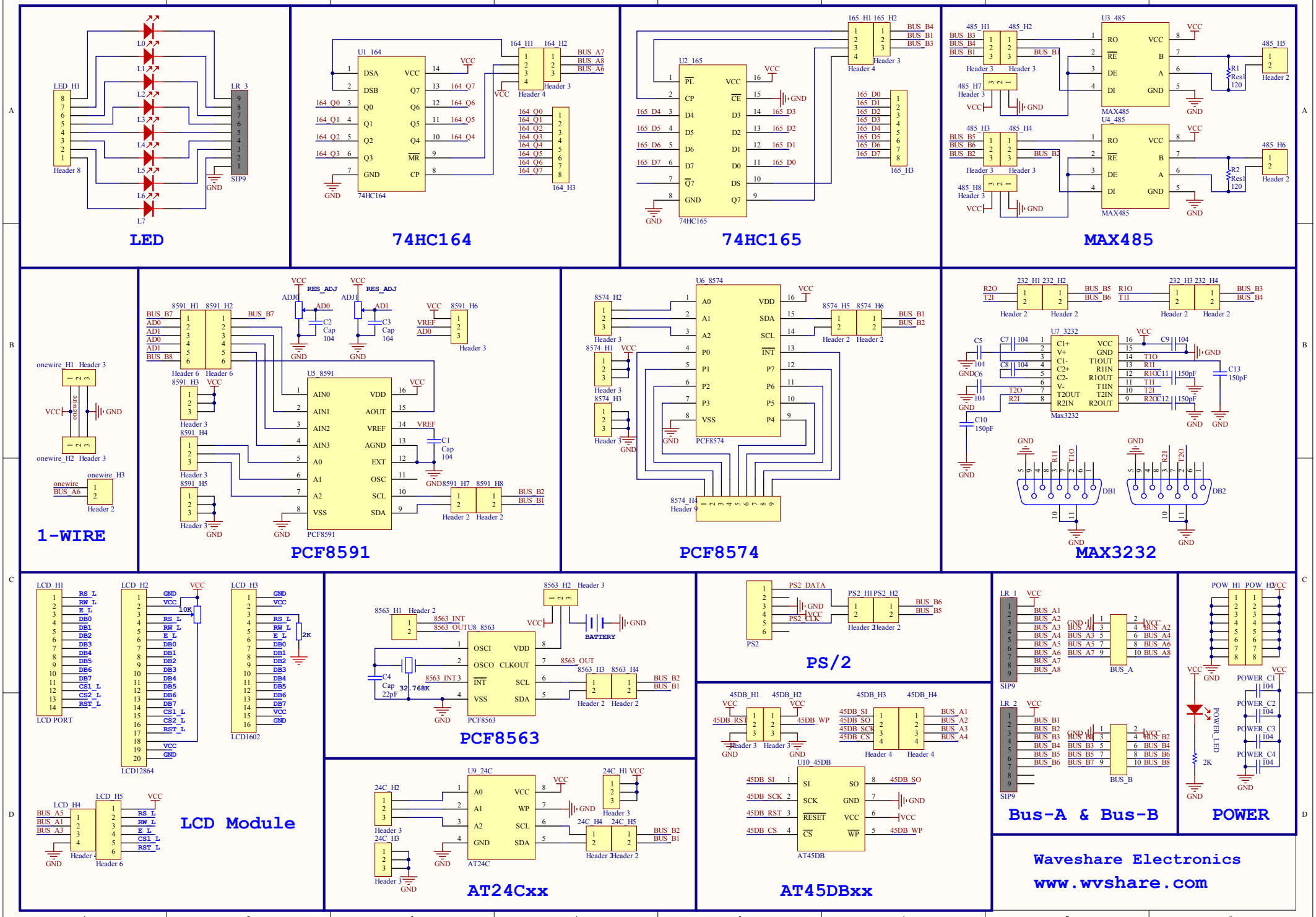
LED
74HC164
74HC165
MAX485
1-WIRE
PCF8591
PCF8574
MAX3232
LCD Module
PCF8563
PS/2
AT24Cxx
AT45DBxx
Bus-A & Bus-B
POWER
Waveshare Electronics
www.wvshare.com