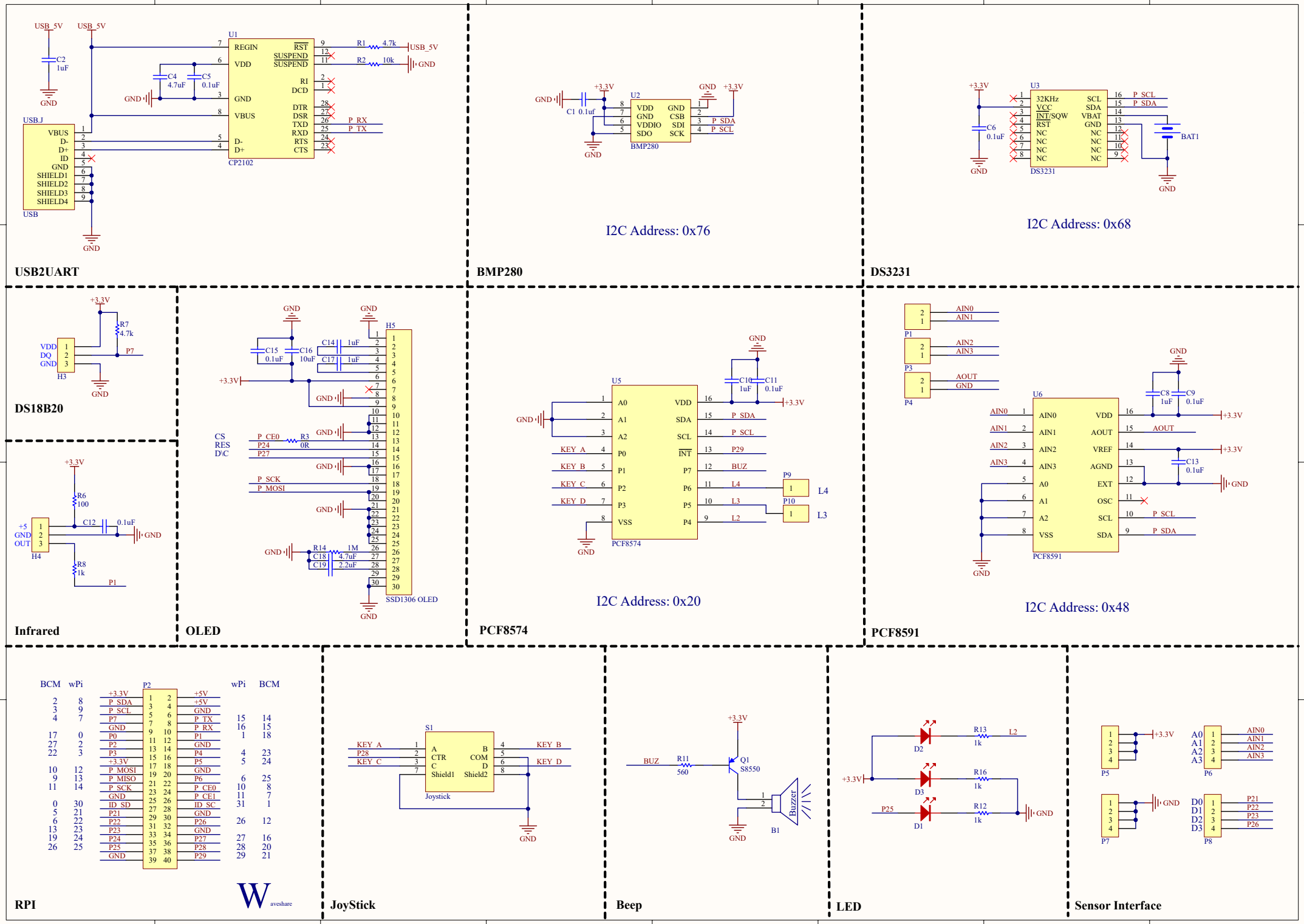
USB2UART
BMP280
I2C Address: 0x76
DS3231
I2C Address: 0x68
DS18B20
Infrared
OLED
PCF8574
I2C Address: 0x20
PCF8591
I2C Address: 0x48
RPI
JoyStick
Beep
LED
Sensor Interface