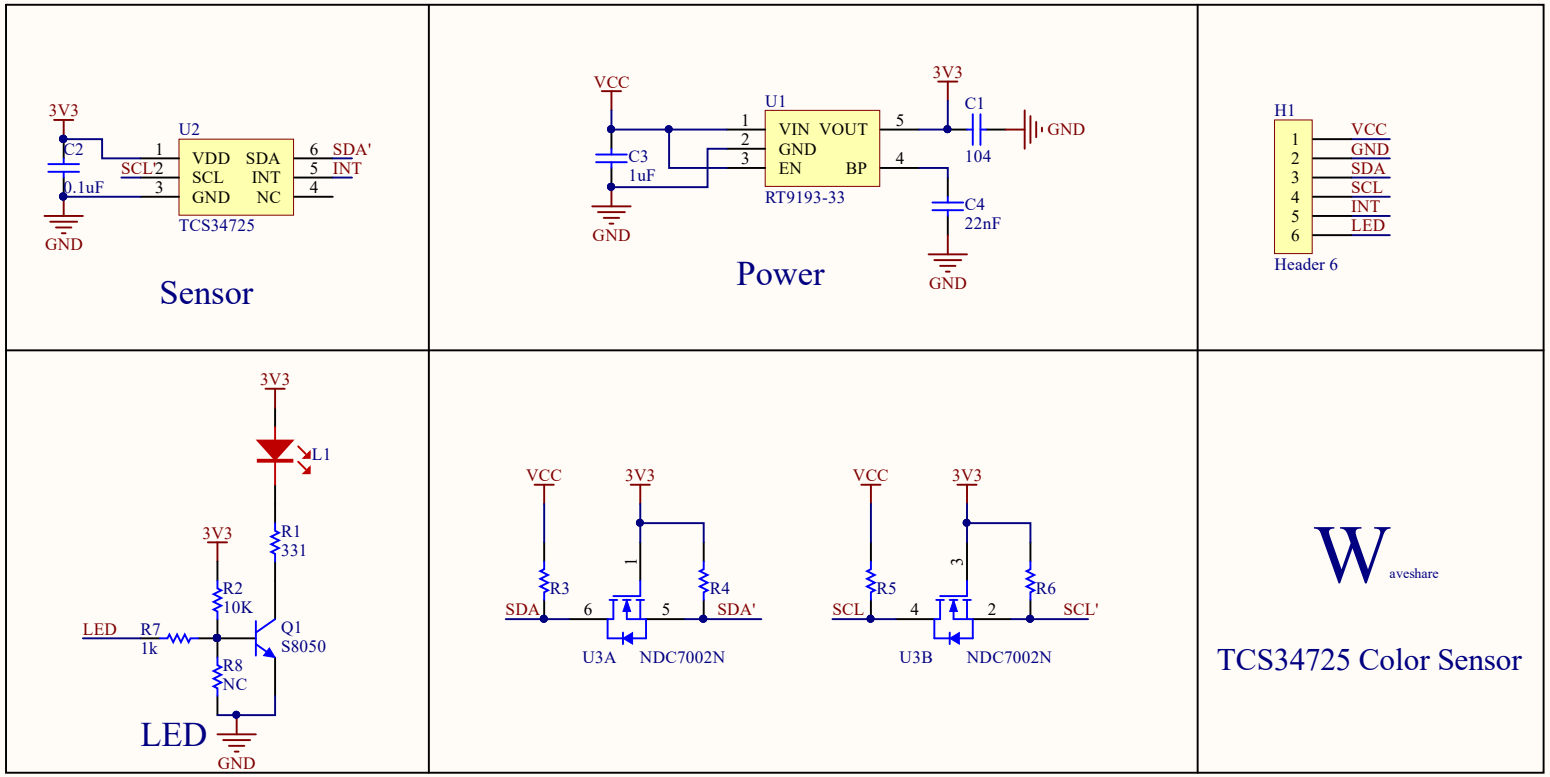
3V3
C2
0.1uF
GND
U2
VDD SDA
SCL INT
GND NC
TCS34725
SCL
SDA'
INT
Sensor
VCC
C3
1uF
GND
U1
VIN VOUT
GND
EN BP
RT9193-33
3V3
C1
104
GND
C4
22nF
GND
Power
H1
VCC
GND
SDA
SCL
INT
LED
Header 6
3V3
L1
R1
331
R2
10K
LED
R7
1k
Q1
S8050
R8
NC
GND
LED
VCC
3V3
R3
R4
SDA
SDA'
U3A
NDC7002N
VCC
3V3
R5
R6
SCL
SCL'
U3B
NDC7002N
Waveshare
TCS34725 Color Sensor

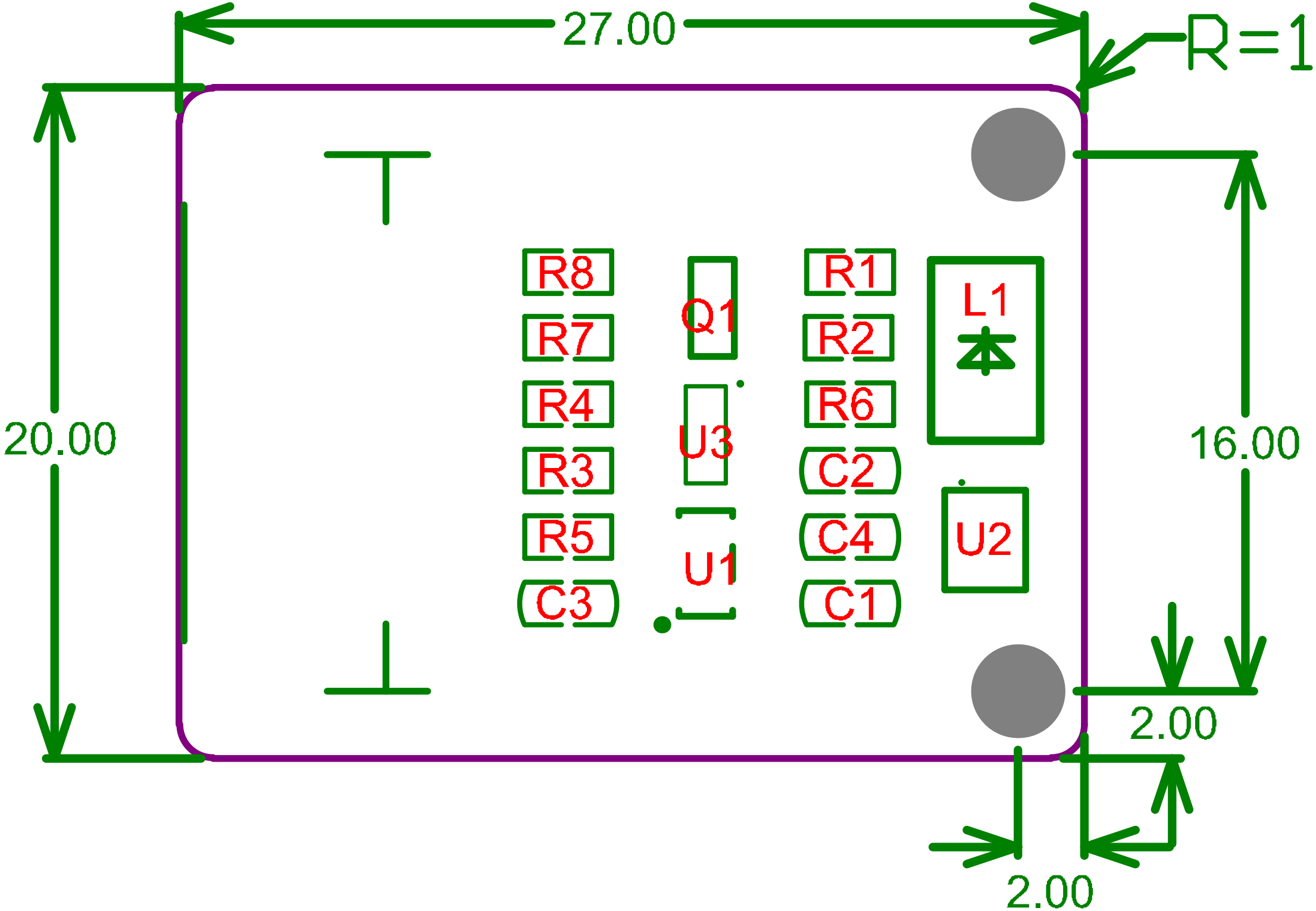
27.00
R=1
20.00
16.00
2.00
2.00
R8
R7
R4
R3
R5
C3
Q1
U3
U1
R1
R2
R6
C2
C4
C1
L1
U2