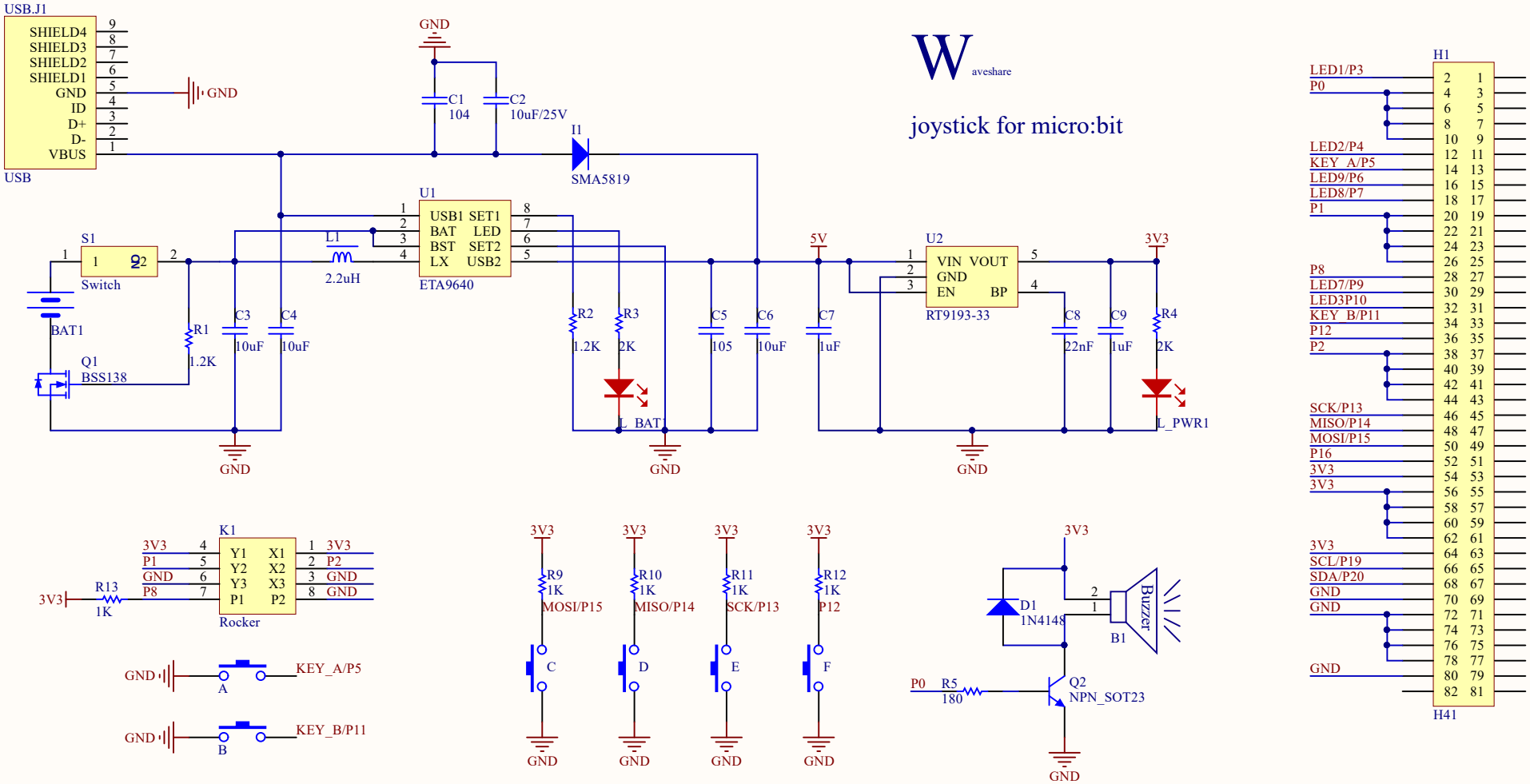
joystick for micro:bit
USB.J1
SHIELD4
SHIELD3
SHIELD2
SHIELD1
GND
ID
D+
D-
VBUS
USB
GND
C1
104
C2
10uF/25V
I1
SMA5819
U1
USB1 SET1
BAT LED
BST SET2
LX USB2
ETA9640
L1
2.2uH
S1
Switch
BAT1
Q1
BSS138
R1
1.2K
C3
10uF
C4
10uF
R2
1.2K
R3
2K
L_BAT1
C5
105
C6
10uF
C7
1uF
5V
U2
VIN VOUT
GND
EN BP
RT9193-33
C8
22nF
C9
1uF
3V3
R4
2K
L_PWR1
K1
Y1 X1
Y2 X2
Y3 X3
P1 P2
3V3
P1
GND
P8
P2
Rocker
R13
1K
KEY_A/P5
KEY_B/P11
R9
1K
MOSI/P15
R10
1K
MISO/P14
R11
1K
SCK/P13
R12
1K
P12
D1
1N4148
Buzzer
B1
P0
R5
180
Q2
NPN_SOT23
H1
H41
LED1/P3
P0
LED2/P4
KEY_A/P5
LED9/P6
LED8/P7
P1
P8
LED7/P9
LED3P10
KEY_B/P11
P12
P2
SCK/P13
MISO/P14
MOSI/P15
P16
3V3
SCL/P19
SDA/P20

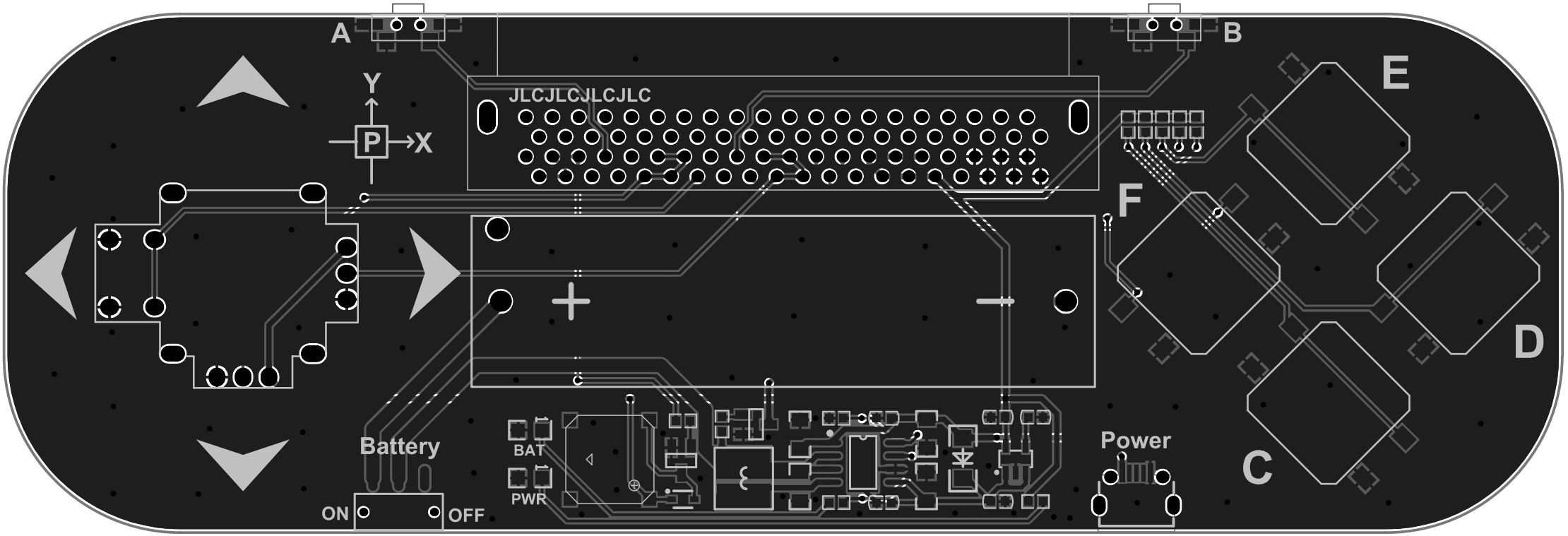
A
B
Y
P
X
JLCJLCJLCJLC
E
F
D
C
Battery
BAT
PWR
ON
OFF
Power