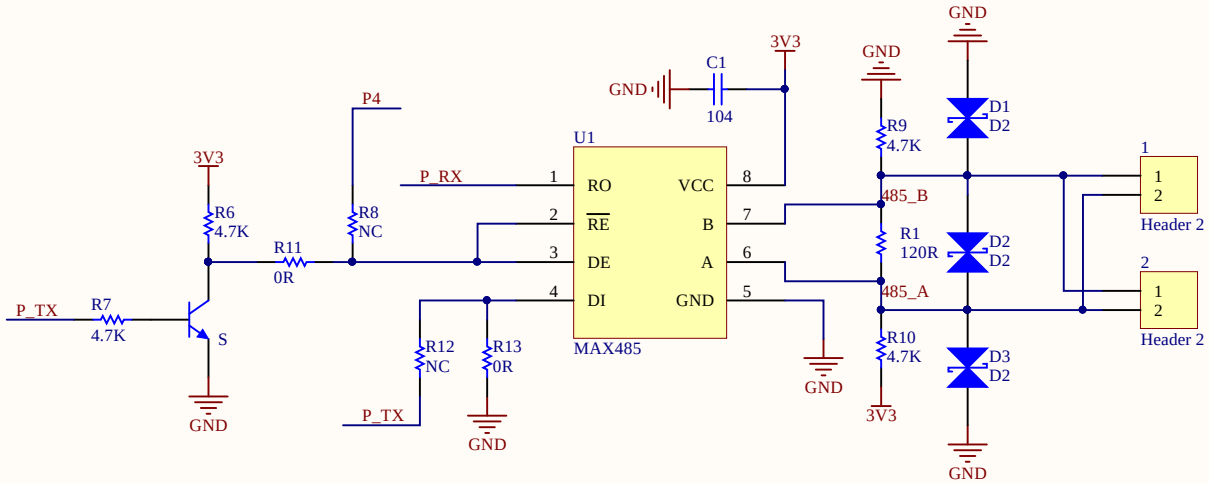

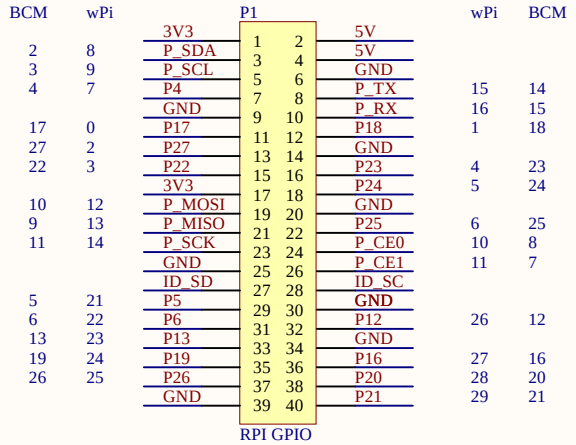

aveshare
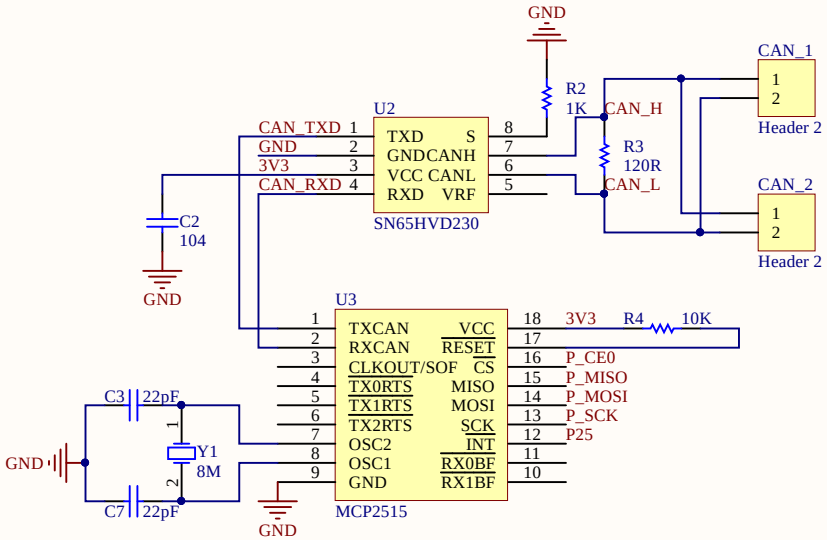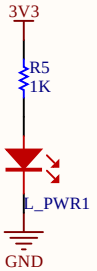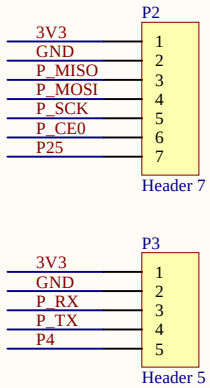
RS485 CAN HAT