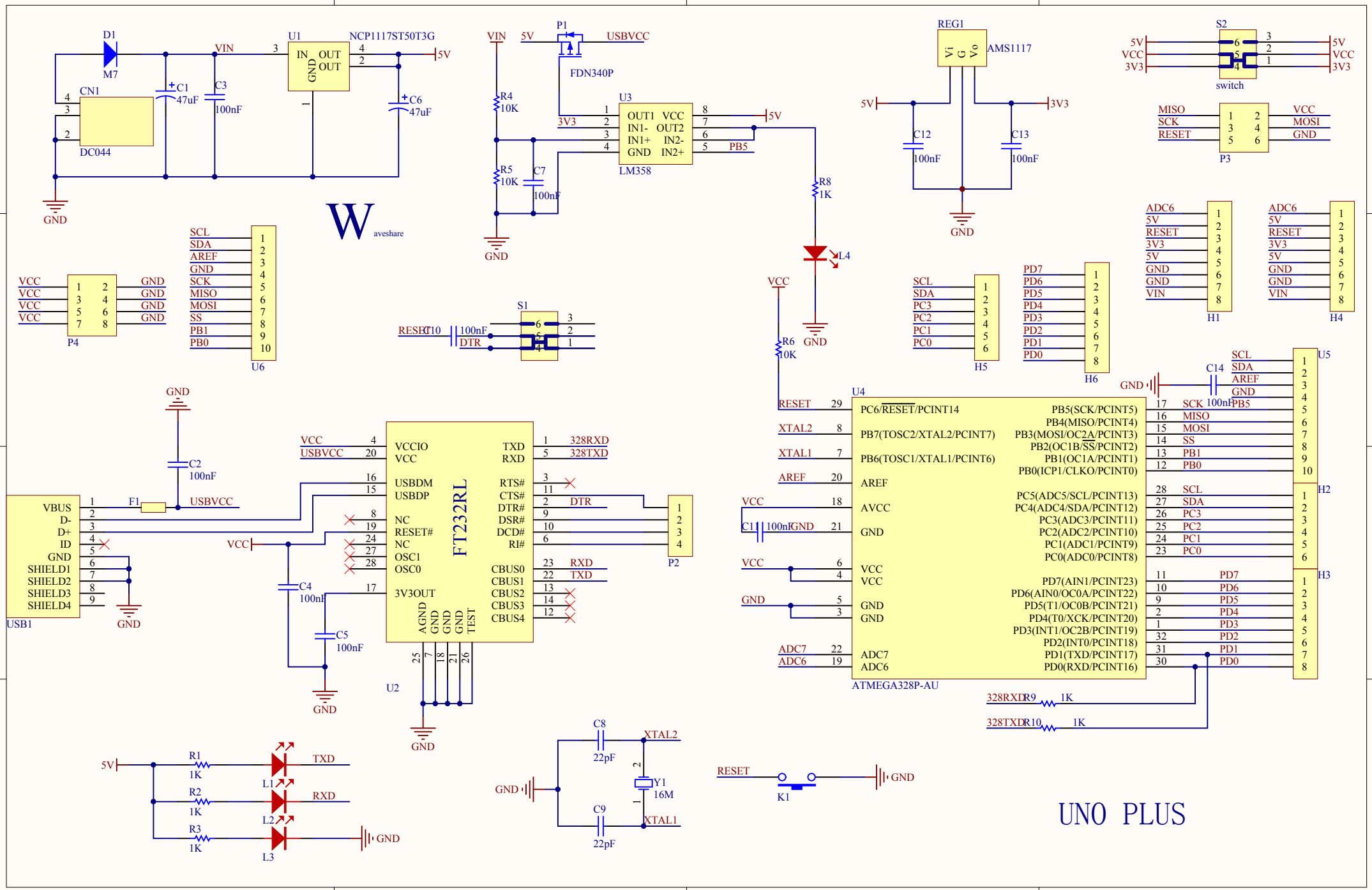
D1
M7
CN1
DC044
C1
47uF
C3
100nF
U1
NCP1117ST50T3G
IN OUT
GND OUT
C6
47uF
5V
VIN
GND
P1
FDN340P
USBVCC
R4
10K
R5
10K
C7
100nF
U3
OUT1 VCC
IN1- OUT2
IN1+ IN2-
GND IN2+
LM358
3V3
PB5
R8
1K
L4
REG1
Vi G Vo
AMS1117
C12
100nF
C13
100nF
S2
switch
MISO
SCK
RESET
VCC
MOSI
GND
P3
P4
SCL
SDA
AREF
SCK
MISO
MOSI
SS
PB1
PB0
U6
S1
RESET
C10
100nF
DTR
R6
10K
H5
PD7
PD6
PD5
PD4
PD3
PD2
PD1
PD0
H6
ADC6
RESET
3V3
GND
VIN
H1
H4
C2
100nF
F1
USBVCC
USB1
VBUS
D-
D+
ID
SHIELD1
SHIELD2
SHIELD3
SHIELD4
FT232RL
VCCIO
USBDM
USBDP
NC
RESET#
OSC1
OSC0
3V3OUT
TXD
RXD
RTS#
CTS#
DTR#
DSR#
DCD#
RI#
CBUS0
CBUS1
CBUS2
CBUS3
CBUS4
AGND
TEST
328RXD
328TXD
DTR
RXD
TXD
P2
C4
100nF
C5
100nF
U2
U4
ATMEGA328P-AU
PC6/RESET/PCINT14
PB7(TOSC2/XTAL2/PCINT7)
PB6(TOSC1/XTAL1/PCINT6)
AREF
AVCC
ADC7
ADC6
PB5(SCK/PCINT5)
PB4(MISO/PCINT4)
PB3(MOSI/OC2A/PCINT3)
PB2(OC1B/SS/PCINT2)
PB1(OC1A/PCINT1)
PB0(ICP1/CLKO/PCINT0)
PC5(ADC5/SCL/PCINT13)
PC4(ADC4/SDA/PCINT12)
PC3(ADC3/PCINT11)
PC2(ADC2/PCINT10)
PC1(ADC1/PCINT9)
PC0(ADC0/PCINT8)
PD7(AIN1/PCINT23)
PD6(AIN0/OC0A/PCINT22)
PD5(T1/OC0B/PCINT21)
PD4(T0/XCK/PCINT20)
PD3(INT1/OC2B/PCINT19)
PD2(INT0/PCINT18)
PD1(TXD/PCINT17)
PD0(RXD/PCINT16)
C11
100nF
C14
100nF
U5
H2
H3
R9
1K
R10
1K
R1
1K
R2
1K
R3
1K
L1
L2
L3
C8
22pF
C9
22pF
Y1
16M
XTAL2
XTAL1
K1
UNO PLUS