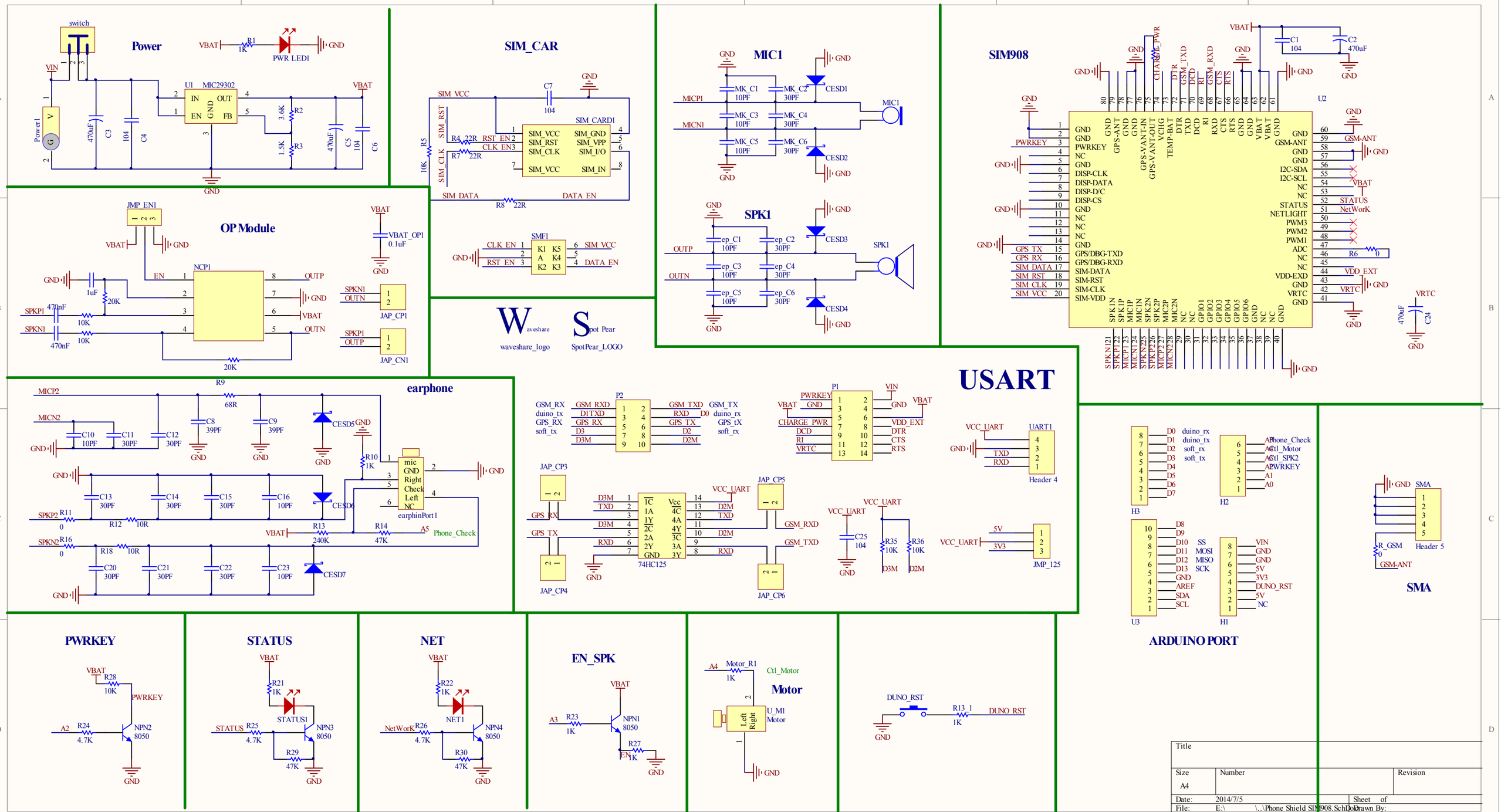
Power
switch
VIN
Power1
U1 MIC29302
IN
OUT
EN
GND
FB
VBAT
R1 1K
PWR LED1
GND
470uF C3
104 C4
3.6K R2
1.5K R3
470uF C5
104 C6
SIM_CAR
SIM_VCC
C7 104
SIM_CARD1
SIM_VCC
SIM_RST
SIM_CLK
SIM_GND
SIM_VPP
SIM_I/O
SIM_IN
R4 22R RST_EN
R7 22R CLK_EN
R5 10K
SIM_DATA
R8 22R
DATA_EN
SMF1
CLK_EN
RST_EN
K1 K5
A K4
K2 K3
SIM_VCC
DATA_EN
MIC1
MICP1
MICN1
MK_C1 10PF
MK_C2 30PF
MK_C3 10PF
MK_C4 30PF
MK_C5 10PF
MK_C6 30PF
CESD1
CESD2
SPK1
OUTP
OUTN
ep_C1 10PF
ep_C2 30PF
ep_C3 10PF
ep_C4 30PF
ep_C5 10PF
ep_C6 30PF
CESD3
CESD4
SIM908
U2
PWRKEY
GPS_TX
GPS_RX
SIM_DATA
SIM_RST
SIM_CLK
SIM_VCC
STATUS
NETLIGHT
GSM-ANT
I2C-SDA
I2C-SCL
VDD-EXD
VRTC
R6 0
VDD_EXT
C1 104
C2 470uF
C24 470uF
OP Module
JMP_EN1
VBAT_OP1 0.1uF
NCP1
EN
OUTP
OUTN
1uF
20K
470nF
10K
SPKN1
SPKP1
JAP_CP1
JAP_CN1
waveshare_logo
SpotPear_LOGO
earphone
MICP2
MICN2
R9 68R
C8 39PF
C9 39PF
C10 10PF
C11 30PF
C12 30PF
CESD5
R10 1K
mic
GND
Right
Check
Left
NC
earphinPort1
C13 30PF
C14 30PF
C15 30PF
C16 10PF
CESD6
SPKP2 R11 0
R12 10R
SPKN2 R16 0
R18 10R
R13 240K
R14 47K
A5
Phone_Check
C20 30PF
C21 30PF
C22 30PF
C23 10PF
CESD7
USART
P2
GSM_RX
duino_tx
GPS_RX
soft_tx
GSM_RXD
DTXD
D3
D3M
GSM_TXD
RXD
GPS_TX
D2
D2M
GSM_TX
duino_rx
GPS_tX
soft_rx
P1
PWRKEY
CHARGE_PWR
DCD
RI
VRTC
VIN
VDD_EXT
DTR
CTS
RTS
UART1
TXD
RXD
Header 4
JAP_CP3
JAP_CP4
74HC125
VCC_UART
JAP_CP5
JAP_CP6
C25 104
R35 10K
R36 10K
5V
3V3
JMP_125
H3
H2
U3
H1
ARDUINO PORT
SMA
Header 5
R_GSM 0
GSM-ANT
PWRKEY
R28 10K
R24 4.7K
A2
NPN2 8050
STATUS
R21 1K
STATUS1
R25 4.7K
NPN3 8050
R29 47K
NET
R22 1K
NET1
NetWork
R26 4.7K
NPN4 8050
R30 47K
EN_SPK
A3
R23 1K
NPN1 8050
R27 1K
EN
Motor
A4
Motor_R1 1K
Ctl_Motor
U_M1 Motor
Left
Right
DUNO_RST
R13_1 1K
Title
Size A4
Number
Revision
Date: 2014/7/5
Sheet of
File: E:\...\Phone Shield SIM908.SchDoc
Drawn By: